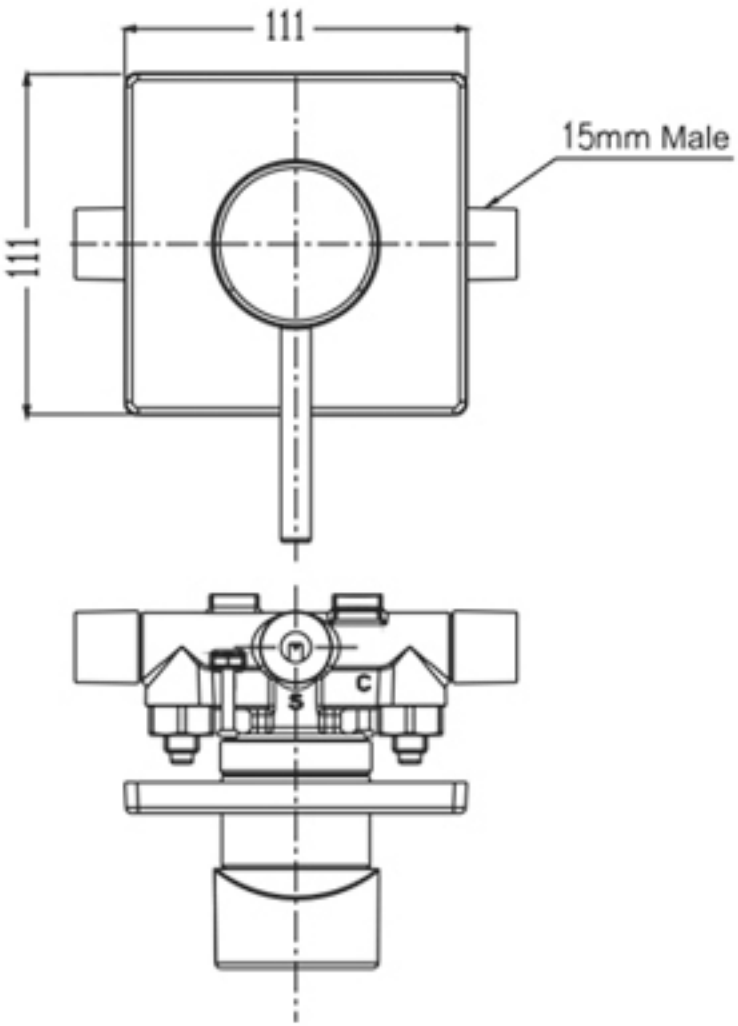
111
111
15mm Male
H
C
S

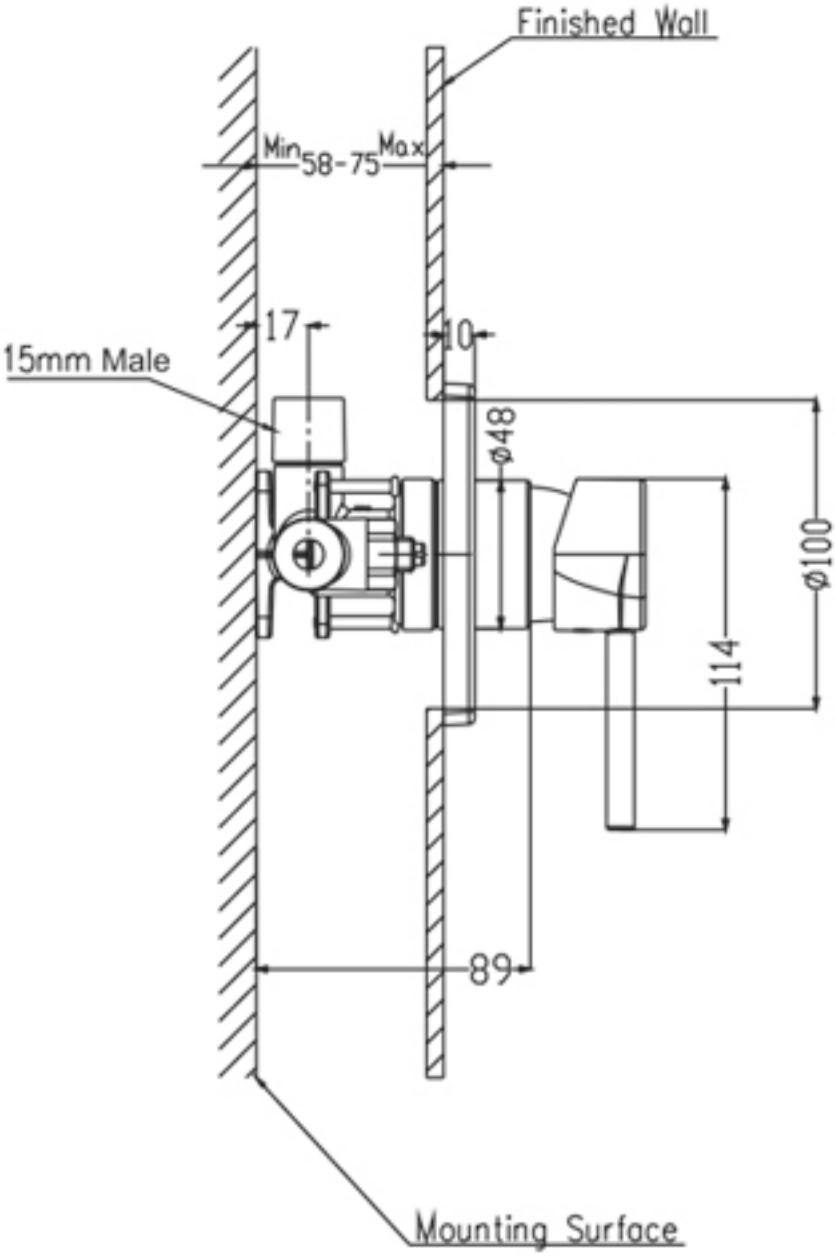
Finished Wall
Min
58-75
Max
17
10
15mm Male
ø48
ø100
114
89
Mounting Surface