Brand	hansgrohe
Art. Name	**Zesis M33** Single lever kitchen mixer 150, 1jet
Art. Nr.	74802803
Surface	Stainless Steel Finish

Product picture

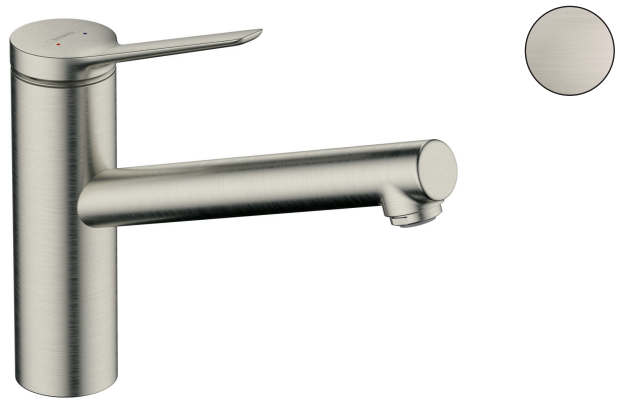

Drawing

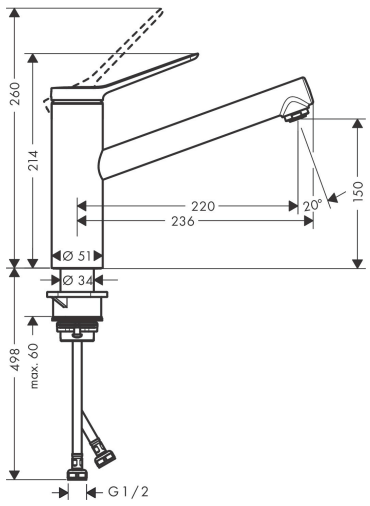

Features

- ComfortZone 150
- swivel range adjustable in 3 steps 60°, 110° or 360°
- NormalSpray
- connection dimension: DN15
- maximum flow rate at 3 bar: 5,8 l/min
- ceramic cartridge
- connection type: G ⅜ hose connections
- temperature limitation adjustable
- suitable for continuous flow water heaters

Technology

Spray Types

Brand	hansgrohe
Art. Name	**Zesis M33** Single lever kitchen mixer 150, 1jet
Art. Nr.	74802803
Surface	Stainless Steel Finish
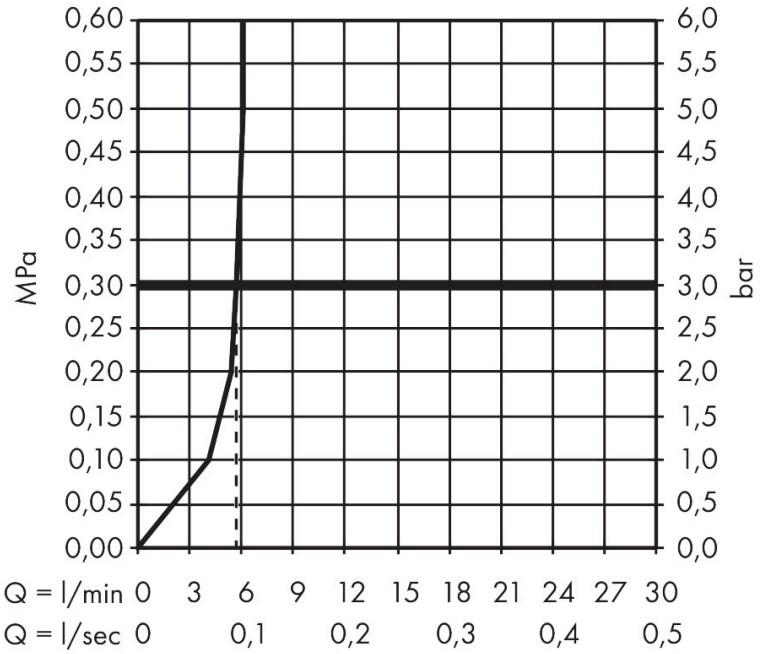
Flow chart