hansgrohe

Vivenis
Single lever bath mixer floor-standing
Finish: **Chrome/Matt Black/Matt White**

Description

product features

- consists of: single lever bath mixer floor standing, baton hand shower, shower hose, shower holder
- 2 functions
- projection: 236 mm
- spray type mixer: WaterfallStream
- spray type hand shower: Rain, Mono
- maximum flow rate at 3 bar: 21,3 l/min
- flow rate for bath spout at 3 bar: 21,3 l/min
- flow rate of hand shower at 3 bar: 13,4 l/min
- ceramic cartridge
- temperature limitation adjustable
- diverter with automatic resetting
- non-return valve
- connection dimension: DN15
- connection type: basic set
- deck mounted
- min. operating pressure: 1 bar
- max. operating pressure: 10 bar

Technology

AirPower

Design awards

reddot winner 2021

GERMAN DESIGN AWARD WINNER 2022

Product image

Scale drawing

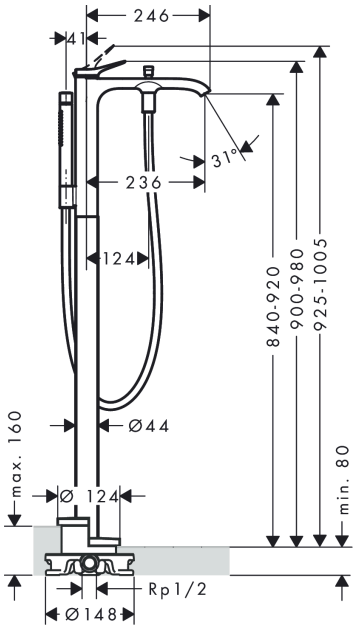
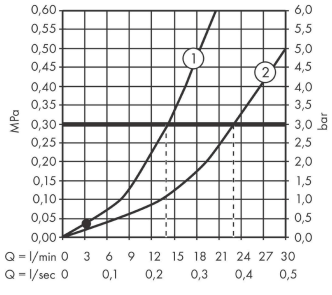
Flowchart