ASTRO II
Pull-Down Sink Mixer

LF254383CP | Chrome
LF254383BN | Brushed Nickel
LF254383MB | Matte Black
LF254383BB | Brushed Brass
LF254383GM | Gun Metal

WELS 5 Star 6.0L/M | Dual Function Spray
Swivel Spout

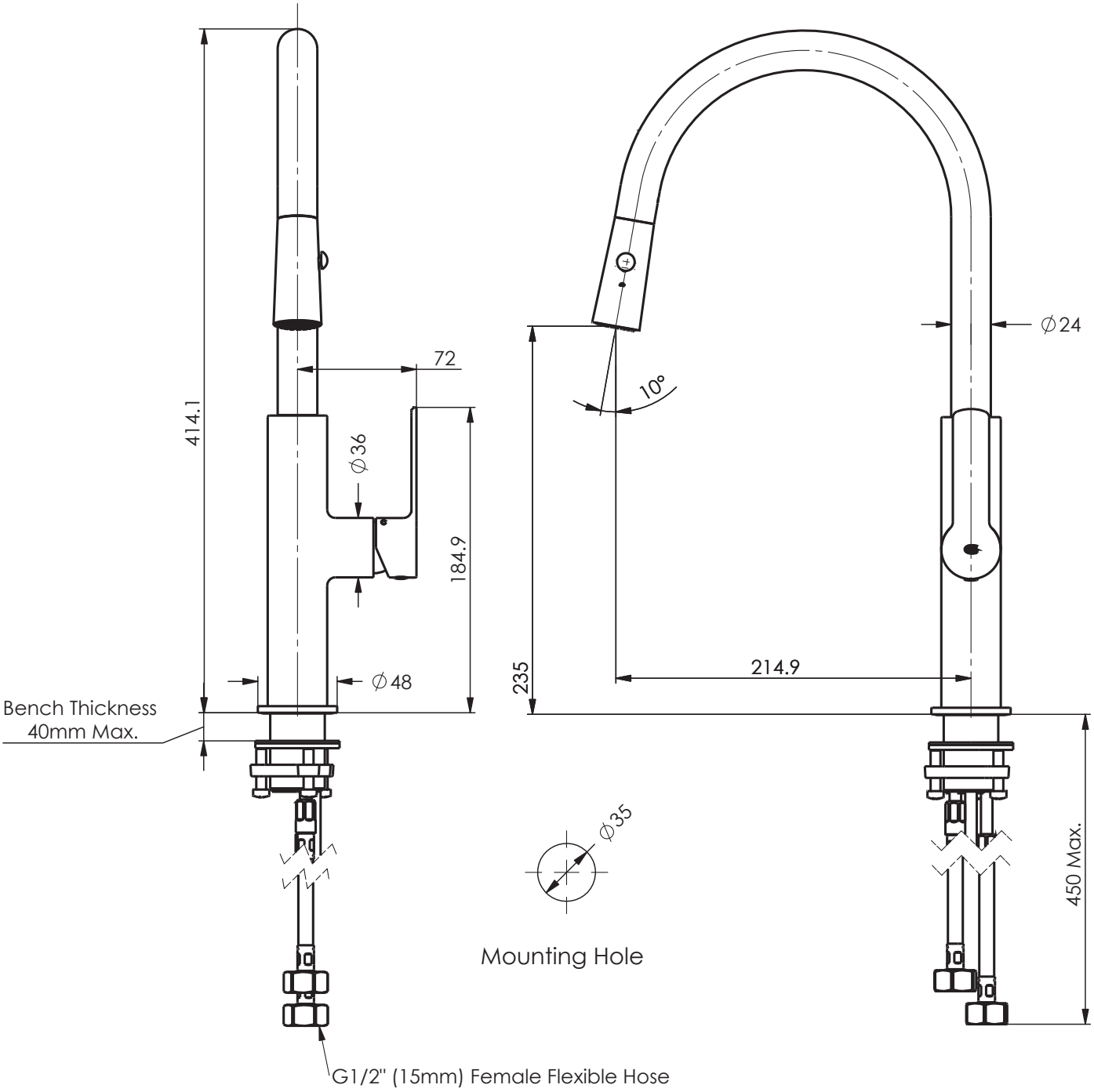

GREENS
where life meets water