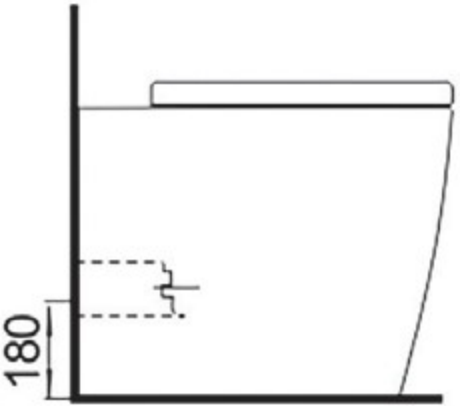

P Trap

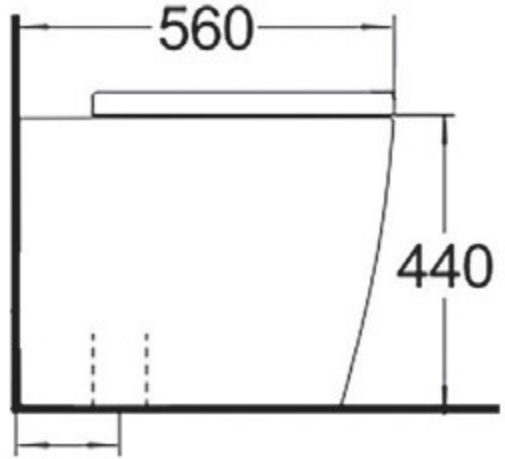
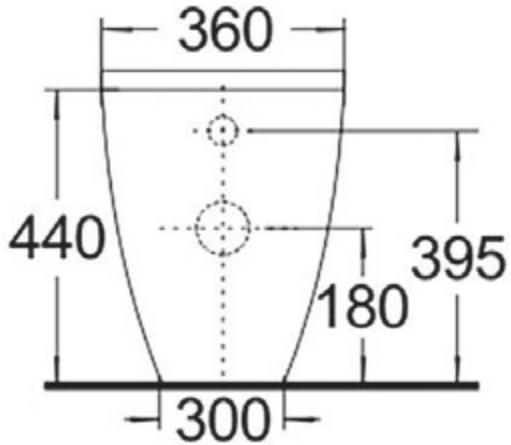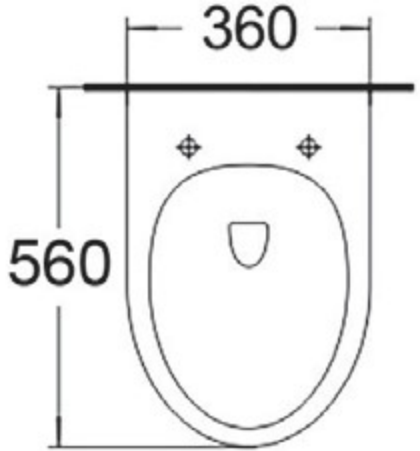
S Trap