hansgrohe

Croma
Showerpipe 220 1jet Reno
Finish: **Chrome**

Description

product features

- consists of: overhead shower, hand shower, shower hose, hand shower holder, shower bar
- overhead shower Croma 220
- shower head size overhead shower: 220 mm
- spray type overhead shower: RainAir
- spray disc surface: chrome
- ball-joint: overhead shower angle adjustable
- maximum flow rate at 3 bar: 18,5 l/min
- flow rate RainAir spray (at 3 bar): 14 l/min
- spray type hand shower: Rain, Massage spray, Shampoo spray, normal spray
- flow rate of hand shower at 3 bar: 14,5 l/min
- minimum flow pressure: 1,7 bar
- max. operating pressure: 6 bar
- mounting type: exposed installation
- pipe can be shortened in height
- shower bar diameter: 22 mm
- height-adjustable hand shower holder
- shower arm length: 400 mm
- swivelling shower arm
- water connection: Isiflex shower hose 80 cm
- connection dimension: DN15
- connection thread G ½
- suitable for continuous flow water heaters with an output of 18 kW

Technology

Product image

Scale drawing

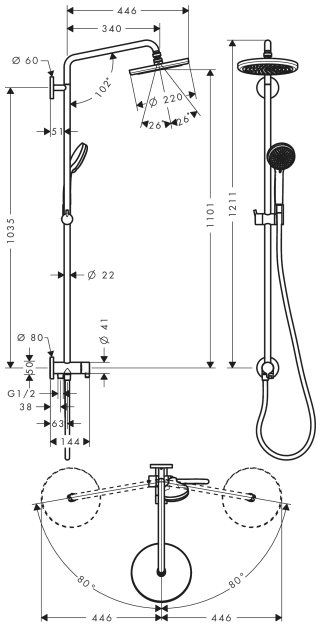

Croma
Showerpipe 220 1jet Reno
Finish: **Chrome**

Flowchart

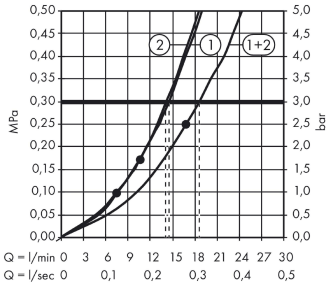

① Hand shower
② Overhead shower