750mm (2 Drawer)

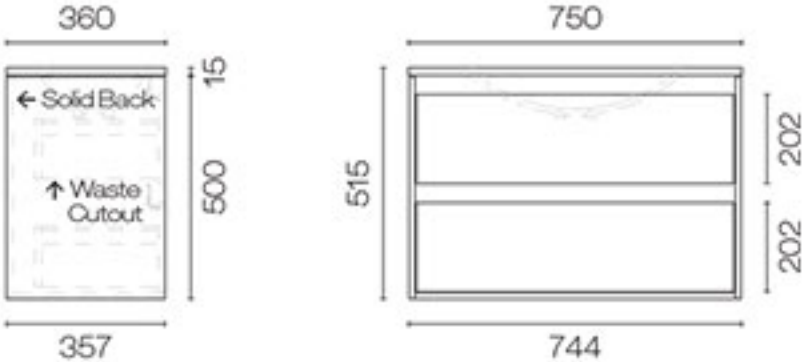
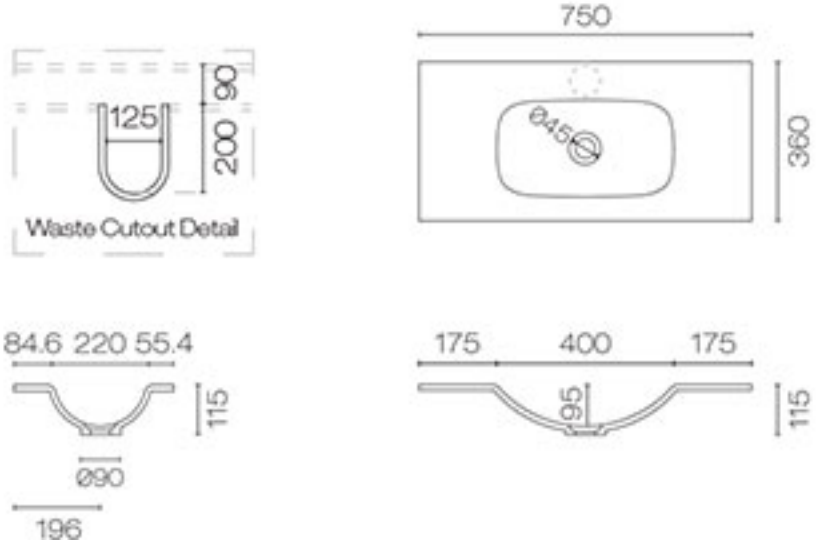
750mm Top View