ELECTRA BASIN MIXER

19112550 | Chrome
19112551 | Brushed Nickel
19112557 | Matte Black

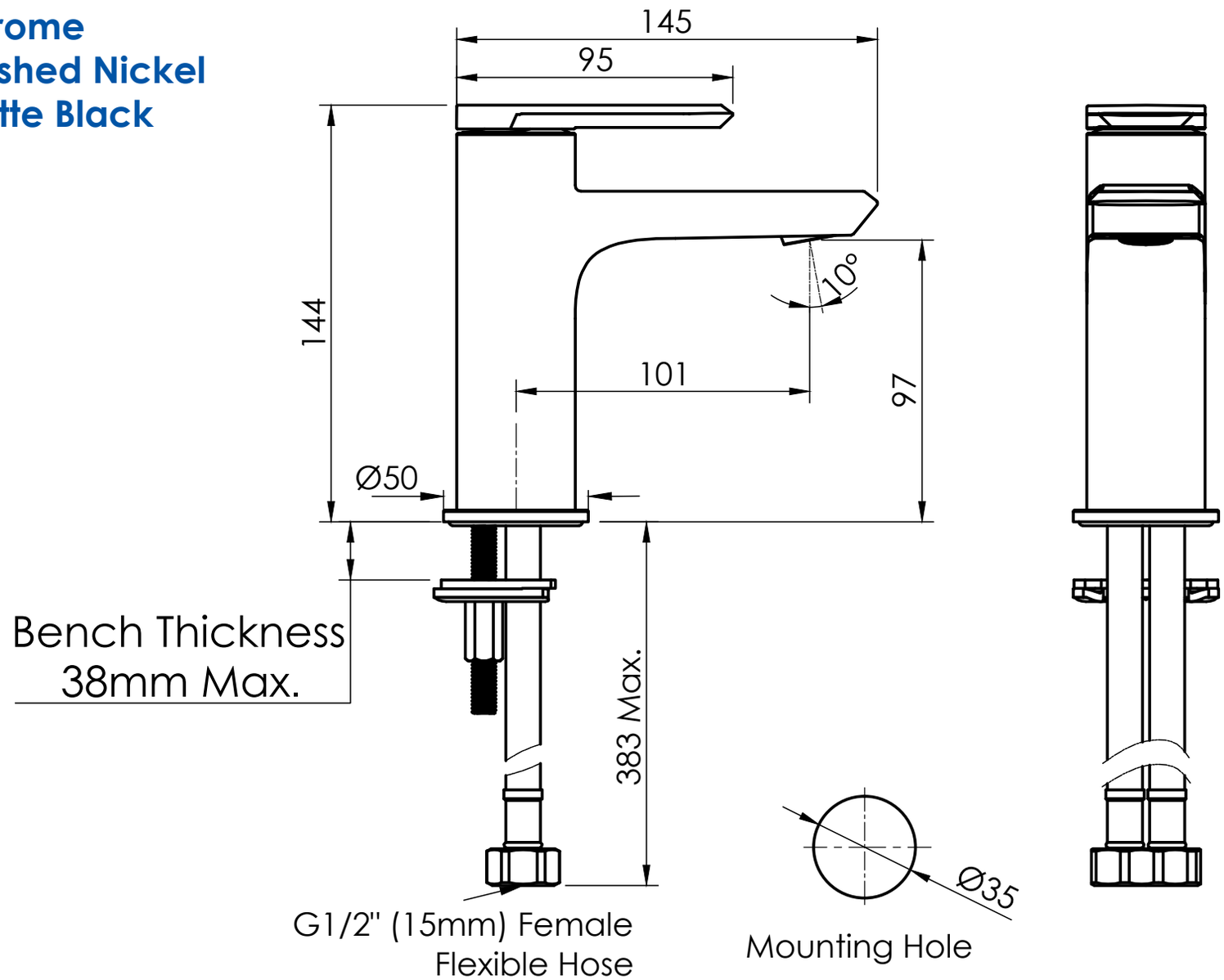

GREENS
where life meets water