METHVEN

DESIGNED NEW ZEALAND & ENGINEERED

Waipori

WAIPORI SHOWER MIXER

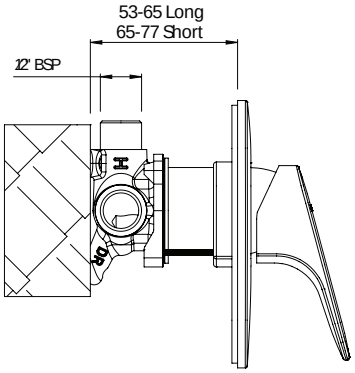

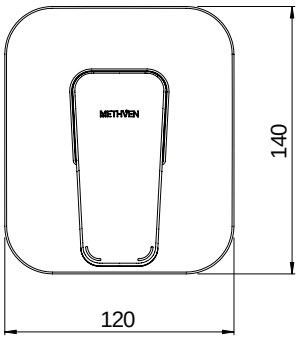

CONSTRUCTION: Brass body

CARTRIDGE: Ceramic

CLASSIFICATION: Suitable for **mains pressure** only

INLET CONNECTIONS: 1/2 " BSP Male

OUTLET CONNECTIONS: 1/2 " BSP Male

WORKING PRESSURE: 150 - 1000kPa

OPERATING TEMPERATURE: 5 °C - 80 °C

- Large 140 x 120mm metal backplate
- DR brass body for greater durability and safe water
- Concealed screws to positively fasten faceplate
- Two dome covers provided for greater installation tolerance
- Brass feet for ease of installation